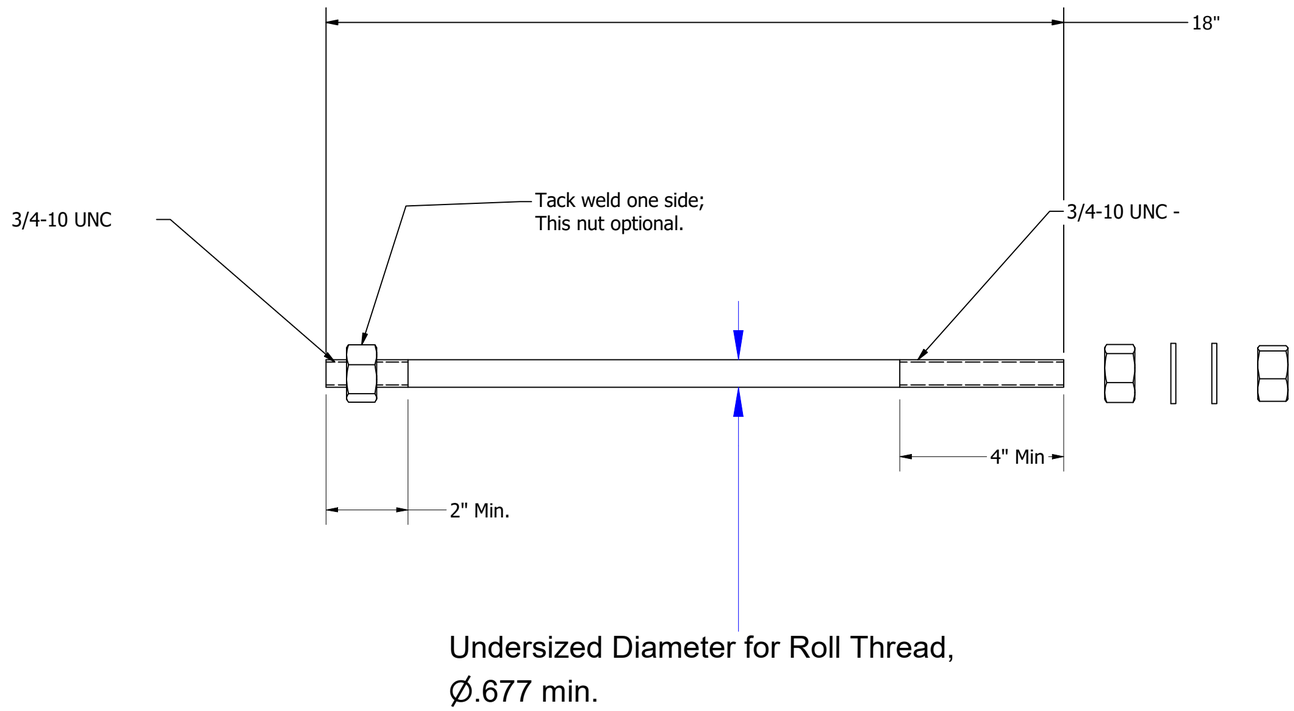

Available in the Following Grades:

- F1554 Gr. 55
- F1554 Gr. 55 Hot Dip Galv.
- F1554 Gr. 105
- 304 Stainless

UNLESS OTHERWISE SPECIFIED

DIMENSIONS ARE IN INCHES			
.X	.XX	.XXX	ANGLE
±	±	±	± 0.5°

FINISH 125

DIMENSIONING & TOLERANCING
PER ASME Y14.5-2009
ALL DIMENSIONS IN INCHES [MM]
BEFORE / AFTER SURFACE TREATMENT
REMOVE ALL BURS AND SHARP EDGES
THREADS: EXT CLASS 2A, INT 2B
PROTECTIVE WRAP OR EQUIV. IDENTIFY
PART ON WRAP OR EQUIV.

MATERIAL
F-1554 Grade 55

FINISH
Hot Dip Galvanized

DRAWN:	Alan Harris	12/21/2021
CHECK:		
ENGR:		12/21/2021
MFG:		
REVISION BY:		
CUSTOMER:		

Alexander Screw Products, Inc.
8750 Pendleton Pike
Indianapolis, IN 46226

TITLE:
AS075018G

SIZE C
DRAWING NO. Anchor Bolt Print
REV.

SCALE
WT N/A
SHEET 1 OF 1

Anchor Bolt Print
P/N