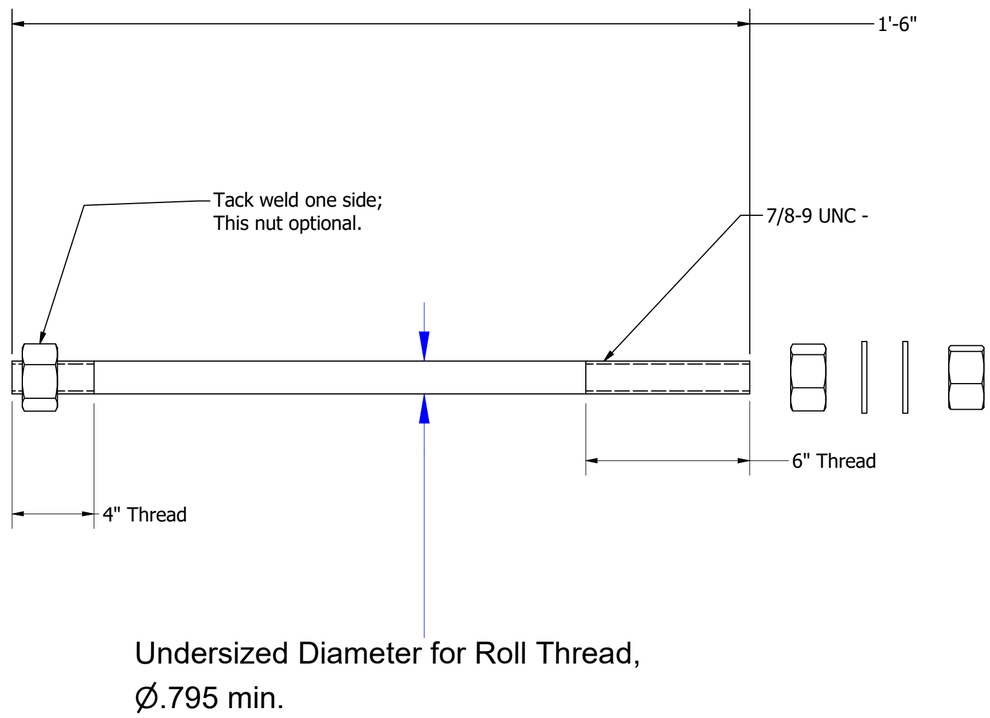

UNLESS OTHERWISE SPECIFIED					
DIMENSIONS ARE IN INCHES				MATERIAL F-1554 Grade 55	
.X	.XX	.XXX	ANGLE		
±	±	±	± 0.5°		
FINISH 125					
DIMENSIONING & TOLERANCING PER ASME Y14.5-2009 ALL DIMENSIONS IN INCHES [MM] BEFORE / AFTER SURFACE TREATMENT REMOVE ALL BURS AND SHARP EDGES THREADS: EXT CLASS 2A, INT 2B PROTECTIVE WRAP OR EQUIV. IDENTIFY PART ON WRAP OR EQUIV.				FINISH Plain	

DRAWN:	Alan Harris	12/21/2021
CHECK:		
ENGR:		12/21/2021
MFG:		
REVISION BY:		
CUSTOMER:		

Alexander Screw Products, Inc.
8750 Pendleton Pike
Indianapolis, IN 46226

TITLE: AS087518P

SIZE C | DRAWING NO. Anchor Bolt Print | REV.

SCALE | WT N/A | SHEET 1 OF 1

Anchor Bolt Print

P/N