[5/8"] ANCHOR BOLT

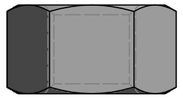

X | 1 | ☒ Gr A ☐ Gr C ☐ DH ☐ 2H

X | 1 | ☒ USS FW ☐ F436 ☐ PLATE

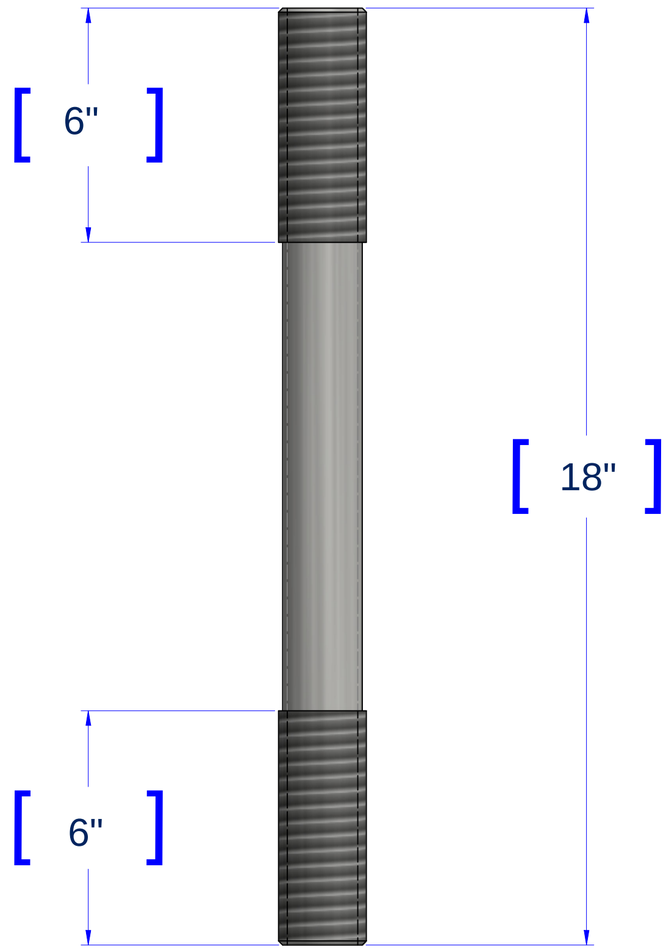

X | 1 | ☒ USS FW ☐ F436 ☐ PLATE

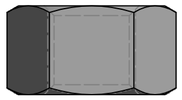

X | 1 | ☒ Gr A ☐ Gr C ☐ DH ☐ 2H

UNLESS OTHERWISE SPECIFIED

DIMENSIONS ARE IN INCHES

Alexander Screw Products, Inc.

8750 Pendleton Pike
Indianapolis, IN 46226

All bolts are roll threaded from undersized material per the F1554 Standard.

Galvanized bolts shall meets F2329-11.

All Threads meet a minimum of 1A and are made from unground F1554 Hot Roll Material.

GRADE:
- ☐ F1554 A36
- ☒ F1554 55-S1
- ☐ F1554 105
- ☐ 304 STAINLESS
- ☐

PART #: AS062518G

FINISH:
- ☐ PLAIN STEEL
- ☒ HOT DIP GALVANIZE

ROLL THREAD Ø: 0.5625"

THREAD SIZE: 5/8"-11

CHOP LENGTH: 18"